DIJEMSS: Dinasti International Journal of Education Management and Social Science
E-ISSN: 2686-6331
P-ISSN: 2686-6358
DINASTI PUBLISHER
https://dinastipub.org/DIJEMSS dinasti.info@gmail.com +62 811 7404 455

DOI: https://doi.org/10.38035/dijemss.v8i1
https://creativecommons.org/licenses/by/4.0/
Received: 25 July 2026 | **Revised:** 21 September 2026 | **Accepted:** 23 October 2026

The Role of Transformational Leadership in Enhancing Healthcare Workers' Motivation through Commitment to Change in Central Java Hospitals, Indonesia

Andrianto Widjaja[1], Yarwin Yari[2], Joni Phangestu[3]
[1]Sekolah Tinggi Manajemen PPM, Jakarta, Indonesia, and_widjaja@yahoo.com
[2]Sekolah Tinggi Ilmu Kesehatan RS Husada, Jakarta, Indonesia, yarwinyari306@gmail.com
[3]Sekolah Tinggi Manajemen PPM, Jakarta, Indonesia, jonphang@gmail.com

Corresponding Author: and_widjaja@yahoo.com[1]

Abstract: The rapid changes in the healthcare sector require hospitals to adapt and maintain the work motivation of healthcare professionals. This study aims to examine the effect of Transformational Leadership (TL) on Worker Motivation (WM), with Commitment to Change (CR) as a mediating variable. A quantitative approach was used with an explanatory research design, involving 259 healthcare workers from three hospitals in Central Java, Indonesia. Data were collected through a 5-point Likert scale questionnaire and analyzed using Partial Least Squares–Structural Equation Modeling (PLS-SEM). The results show that TL significantly affects CR ($\beta = 0.586$; $p < 0.05$), CR significantly affects WM ($\beta = 0.657$; $p < 0.05$), and TL significantly affects WM both directly ($\beta = 0.176$; $p < 0.05$) and indirectly through CR ($\beta = 0.385$; $p < 0.05$). The structural model explains 34.1% of the variance in CR and 59.5% of the variance in WM. These findings confirm that transformational leadership plays an important role in building emotional commitment to change, which ultimately enhances work motivation. The practical implication of this study is the need for leadership strategies that emphasize inspiration, intellectual stimulation, individualized consideration, and strengthening commitment to change, in order to maintain the performance of healthcare professionals amid the dynamics of the healthcare industry.

Keywords: Transformational Leadership, Commitment To Change, Work Motivation, Hospital

INTRODUCTION

The rapid changes in the healthcare sector demand that every hospital be able to adapt, improve the quality of its services, and maintain the performance of its healthcare workers. Leadership becomes a key factor influencing the organization's success in facing these dynamics. In this context, transformational leadership is considered capable of creating a clear vision, fostering commitment to change, and enhancing employee motivation. This phenomenon is increasingly relevant in hospitals that are facing challenges such as policy changes, technological developments, and more complex patient demands.

According to recent data, the number of hospitals worldwide has reached more than 164,000 units spread across various countries. In Asia, there are over 70,000 hospitals with varying capacities and service quality. Indonesia itself has more than 3,000 hospitals across all provinces, about 40% of which are located on Java Island, the country's economic and population center. This condition indicates that competition in improving healthcare service quality in Java Island—especially in major cities such as Semarang and Surakarta—is becoming increasingly intense. Therefore, hospitals are required to continuously innovate and improve their managerial practices.

Transformational Leadership (TL) is a leadership style that emphasizes providing inspiration, intellectual stimulation, and individualized consideration to encourage subordinates to achieve their highest potential Khan et al[1]. In the context of healthcare organizations, Transformational Leadership (TL) plays an important role in guiding healthcare personnel to accept and embrace change with a positive attitude. A transformational leader is not only oriented toward performance targets but also focuses on creating an adaptive and collaborative work environment [2].

Commitment to Change (CR) refers to employees' emotional attachment and belief in the benefits of organizational change. CR serves as a psychological factor that bridges the relationship between Transformational Leadership (TL) and Work Motivation (WM) [3]. Work motivation in this context includes both intrinsic and extrinsic drives to deliver optimal performance. The relationship among these three variables is interrelated, in which Transformational Leadership (TL) can foster a strong Commitment to Change (CR), which in turn enhances the Work Motivation (WM) of healthcare professionals [4].

Several previous studies have supported the positive relationship among Transformational Leadership (TL), Commitment to Change (CR), and Work Motivation (WM). Research by found Tripuspitas et al [5] that clear communication of vision by leaders can enhance employees' readiness and commitment toward change. Islam et al[6] demonstrated that the transformational leadership style significantly influences employee engagement in the change process. Meanwhile, Divya[7] emphasized that supervisor support plays an important role in shaping positive perceptions of change.

Studies in the healthcare sector reported by Journal 9 and Journal 10 revealed that the dimensions of Transformational Leadership (TL)—particularly inspirational motivation and individualized consideration—directly enhance the work motivation of healthcare professionals. Research from Journal 14 and Journal 15 further supports that Commitment to Change (CR) can mediate the relationship between TL and Work Motivation (WM). However, studies from Journal 12 and Journal 17 highlight that contextual factors, such as bureaucratic organizational structures and internal resistance, may hinder the effectiveness of this relationship.

The three hospitals included in this study have continued to develop their services through various organizational changes. Specifically, Telogorejo Hospital Semarang has been adapting to new healthcare technologies and management systems, Dr. Oen Solo Baru Hospital has been refining work procedures to improve service quality, and Dr. Oen Kandang Sapi Solo Hospital has been strengthening inter-unit coordination in implementing internal policies. These developments highlight the importance of maintaining healthcare workers' work motivation and commitment to change, with transformational leadership potentially providing a shared vision, encouraging employee involvement, and fostering positive attitudes toward change. This context provides the practical basis for examining the relationships among transformational leadership, commitment to change, and work motivation.

Based on these phenomena, data, and identified issues, this study aims to examine the effect of Transformational Leadership (TL) on Work Motivation (WM) among healthcare professionals, with Commitment to Change (CR) serving as a mediating variable. The research

is expected to provide practical contributions for hospital management in designing leadership strategies that can improve performance and competitiveness through the reinforcement of employee commitment and work motivation

METHOD

This study uses a quantitative approach with an explanatory research design[8]. The purpose is to examine the direct and indirect effects among the variables Transformational Leadership (TL), Commitment to Change (CR), and Worker Motivation (WM) within the predetermined structural model, with CR as a mediating variable between TL and WM. The research population consists of healthcare workers employed in three hospitals: Telogorejo Hospital Semarang, Dr. Oen Solo Baru Hospital, and Dr. Oen Kandang Sapi Solo Hospital. The determination of the sample size uses the G*Power calculation by considering the effect size, significance level ($\alpha = 0.05$), and power (0.95) for the structural equation model. Based on these calculations, the minimum number of samples required is 259 respondents. Sampling was carried out using the purposive sampling technique, selecting respondents who possess relevant knowledge and experience related to organizational change and leadership. The research was conducted from May to July 2025, covering the stages of instrument preparation, data collection through questionnaires, and data analysis using Partial Least Squares Structural Equation Modeling (PLS-SEM). The data collection instrument is a closed-ended questionnaire prepared based on the theoretical constructs of each variable, using a 5-point Likert scale (1 = strongly disagree to 5 = strongly agree):

Transformational Leadership (TL) is measured through four dimensions: *Idealized Influence, Inspirational Motivation, Intellectual Stimulation,* and *Individualized Consideration.* The Pearson Product Moment validity coefficient for each item ranges from 0.729 to 0.926 (r-calculated > r-table 0.227). The Cronbach's Alpha reliability coefficient is 0.976 (≥ 0.70), indicating excellent reliability. Commitment to Change (CR) is measured through indicators of emotional attachment, belief, and support for organizational change. All questionnaire items show validity coefficients ranging from 0.455 to 0.862 (r-calculated > r-table 0.227), indicating that the instrument is valid. Meanwhile, the reliability test results (Cronbach's Alpha) show a reliability value of 0.965 (≥ 0.70), meaning the instrument is reliable and highly suitable for use. Worker Motivation (WM) includes the intrinsic and extrinsic motivation of healthcare workers. There are 7 indicators (WM1–WM7). The validity test results for all questionnaire items show validity coefficients ranging from 0.455 to 0.862 (r-calculated > r-table 0.227), indicating that the instrument is valid. Meanwhile, the reliability test results (Cronbach's Alpha) show a reliability value of 0.965 (≥ 0.70), meaning the instrument is reliable and very good for use. In addition, all three instruments meet the discriminant validity criteria based on cross-loading values, which are higher for the measured variables than for other variables.

Data analysis uses Partial Least Square–Structural Equation Modeling (PLS-SEM) with the help of SmartPLS version 3.0. The analysis process is carried out in two stages: 1) Measurement Model Analysis (Outer Model); Convergent validity test (loading factor ≥ 0.70; AVE > 0.50); Discriminant validity test (cross-loading and Fornell–Larcker criterion); Reliability test (Cronbach's Alpha and Composite Reliability > 0.70). 2) Structural Model Analysis (Inner Model); Coefficient of determination (R^2) to measure the variance explained by the model; Path coefficients to test direct and indirect effects; Hypothesis significance testing using bootstrapping (t-statistic > 1.96; p-value < 0.05).

RESULT AND DISCUSSION

A. Results of the Measurement Model Analysis (Outer Model)

The data analysis method used in this study is the Partial Least Squares (PLS) analysis method with the assistance of the SmartPLS version 3.0 software. The first analysis conducted is the measurement model analysis (outer model). The measurement model in PLS testing is carried out to examine internal validity and reliability.

1. Validity Test

Validity can be interpreted as the degree to which an instrument accurately and precisely measures what it is intended to measure. The validity test includes the following:

a) Convergent Validity

The purpose of this analysis is to measure the extent of the correlation between indicators and latent variables. The value of Convergent Validity is represented by the standardized loading factor, which reflects the correlation between a latent variable and its indicators. The results of the convergent validity test are as follows:

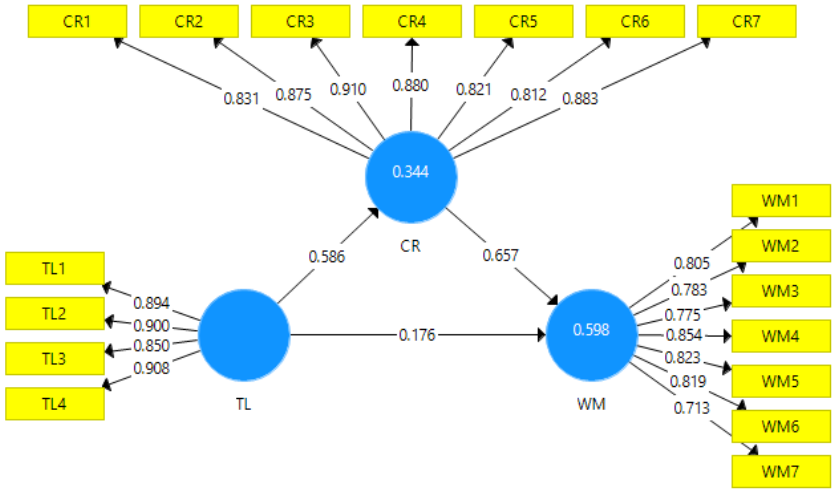

Figure 1. Factor Loading Model

Based on the figure above, the loading factor values for each indicator can be presented in the following table:

Table 1. Indicator Loading Values

	CR	TL	WM
CR1	0.831		
CR2	0.875		
CR3	0.910		
CR4	0.880		
CR5	0.821		
CR6	0.812		
CR7	0.883		
TL1		0.894	
TL2		0.900	
TL3		0.850	

TL4		0.908	
WM1			0.805
WM2			0.783
WM3			0.775
WM4			0.854
WM5			0.823
WM6			0.819
WM7			0.713

Based on the table above, the loading factor values of all variable indicators are ≥ 0.7, which means that the indicators are valid in measuring their respective variables and can therefore be considered ideal.

b) Discriminant Validity

Discriminant Validity refers to the value of the cross-loading factor. This value aims to determine whether the variables have adequate discriminant validity. The results of the cross-loading factor values can be seen in the following table:

Table 2. Cross Loading Factor

	CR	TL	WM
CR1	**0.831**	0.495	0.599
CR2	**0.875**	0.478	0.641
CR3	**0.910**	0.472	0.632
CR4	**0.880**	0.516	0.677
CR5	**0.821**	0.424	0.674
CR6	**0.812**	0.663	0.649
CR7	**0.883**	0.450	0.692
TL1	0.565	**0.894**	0.522
TL2	0.497	**0.900**	0.508
TL3	0.491	**0.850**	0.487
TL4	0.525	**0.908**	0.476
WM1	0.590	0.496	**0.805**
WM2	0.578	0.474	**0.783**
WM3	0.571	0.361	**0.775**
WM4	0.616	0.396	**0.854**
WM5	0.662	0.408	**0.823**
WM6	0.638	0.489	**0.819**
WM7	0.577	0.502	**0.713**

Based on the table above, the loading values for the intended variables are higher than their loading values with other variables. This means that the construct indicators have stronger correlations with their respective variables than with other indicators. In other words, all discriminant validity tests for the indicators are valid.

c) Average Variance Extracted (AVE)

Another way to test discriminant validity is by examining the Average Variance Extracted (AVE) values and the square roots of the AVE. The criterion is whether each

construct has a higher correlation with its own indicators than with other constructs. Before assessing the correlations, the AVE value is considered valid if it is greater than 0.5. The results of the AVE values can be seen in the following table:

Table 3. *Average Variance Extracted* (AVE)

Construct Reliability and Validity

Matrix	Cronbach's Alpha	rho_A	Composite Reliability	Average Variance Extracted ...
	Cronbach's Al...	rho_A	Composite Reliability	Average Variance Extrac...
CR	0.941	0.942	0.952	0.739
TL	0.911	0.912	0.937	0.789
WM	0.904	0.905	0.924	0.636

Based on the table above, it can be seen that the AVE values are all greater than 0.5. In other words, all constructs are valid, meaning that each construct is capable of explaining the variance of its indicators.

2. Reliability Test

The reliability test is conducted to verify the accuracy, consistency, and precision of the instrument in measuring the construct. Reliability can be assessed by calculating the Composite Reliability value or Cronbach's Alpha, as shown below:

Table 4. Composite Reliability and Cronbach's Alpha Values

Construct Reliability and Validity

Matrix	Cronbach's Alpha	rho_A	Composite Reliability	Average Variance Extracted ...
	Cronbach's Al...	rho_A	Composite Reliability	Average Variance Extrac...
CR	0.941	0.942	0.952	0.739
TL	0.911	0.912	0.937	0.789
WM	0.904	0.905	0.924	0.636

Based on the results in the table above, it can be seen that the values of Composite Reliability and Cronbach's Alpha are greater than 0.70. Therefore, it can be concluded that the questionnaire used is consistent and has good reliability.

B. Results of the Structural Model Analysis (Inner Model)

The next analysis is the inner model analysis, also known as the structural model, which is used to predict causal relationships among the variables tested in the model. The results of the structural model analysis are obtained through the coefficient of determination (R^2) and the path coefficients.

1. Coefficient of Determination (R^2)

The coefficient of determination (R^2) is used to determine how well the observed values are generated by the proposed model. The results of the coefficient of determination (R^2) can be seen in the following table:

Table 5. Results of Coefficient of Determination (R^2)

R Square

Matrix | R Square | R Square Adjusted

	R Square	R Square Adjusted
CR	0.344	0.341
WM	0.598	0.595

Based on the Adjusted R^2 values above, it shows that Transformational Leadership (TL) is able to explain the Commitment to Change (CR) construct by 34.1%, while the remaining 65.9% is explained by other constructs not examined in this study. Meanwhile, TL and CR together are able to explain the Worker Motivation (WM) construct by 59.5%, and the remaining 40.5% is explained by other constructs outside the scope of this study.

2. Path Coefficients

The results of the path coefficients, which include the direct, indirect, and total effects, can be explained as follows:

Path Coefficients

Matrix | Path Coefficients

	CR	TL	WM
CR			0.657
TL	0.586		0.176
WM			

Indirect Effects

Total Indirect Effects | Specific Indirect Effects

	CR	TL	WM
CR			
TL			0.385
WM			

Total Effects

Matrix

	CR	TL	WM
CR			0.657
TL	0.586		0.561
WM			

Table 6. Direct Effects, Indirect Effects, and Total Effects

Description	Effect		
	Direct	indirect	Total
TL on CR	0.586		0.586
CR on WM	0.657		0.657
TL on WM	0.176	0.385	0.561

Based on the table above, it can be explained that:

1. Transformational Leadership (TL) has a direct effect on Commitment to Change (CR) of 0.586.
2. Commitment to Change (CR) has a direct effect on Worker Motivation (WM) of 0.657.
3. Transformational Leadership (TL) has a direct effect on Worker Motivation (WM) of 0.176, and an indirect effect through CR of 0.386, resulting in a total effect of 0.561.

C. Hypothesis Testing Results

To determine whether a hypothesis is accepted or rejected, it can be assessed by examining the significance values between constructs, t-statistics, and p-values. The hypothesis testing in this study was conducted using the SmartPLS 3.0 software. These values were obtained from the bootstrapping results. The rule of thumb used in this study is t-statistic > 1.96 with a significance level (p-value) of 0.05 (5%) and a positive beta coefficient. The results of the research model and hypothesis testing are presented as follows:

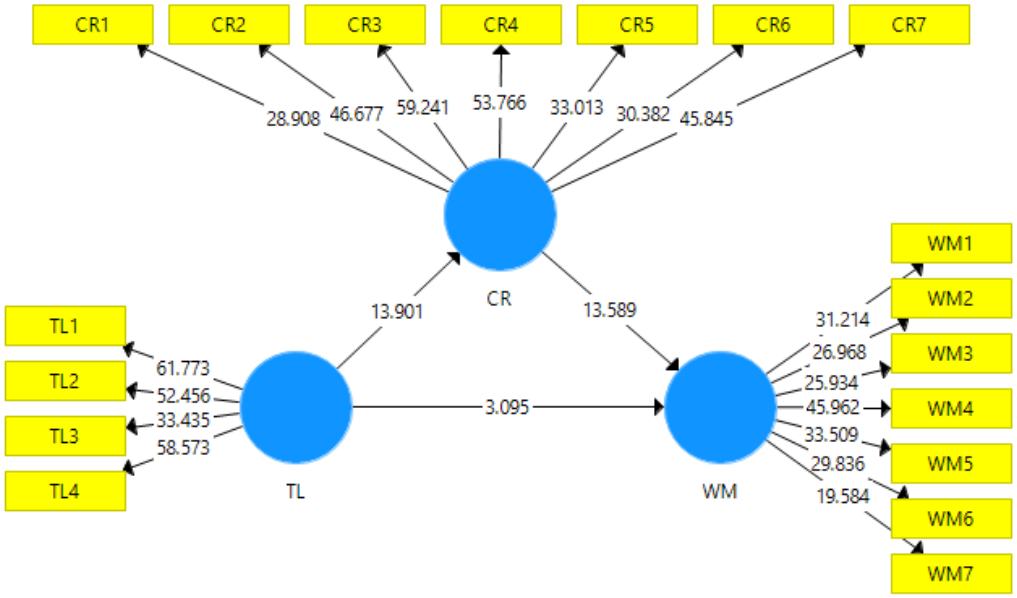

Figure 2. Research Model Results (Bootstrapping)

Table 7. Hypothesis Testing Results

Path Coefficients

Mean, STDEV, T-Values, P-Val... | Confidence Intervals | Confidence Intervals Bias Co... | Sample

	Original Sampl...	Sample Mean (...	Standard Devia...	T Statistics (|O/...	P Values
CR -> WM	0.657	0.658	0.048	13.589	0.000
TL -> CR	0.586	0.590	0.042	13.901	0.000
TL -> WM	0.176	0.177	0.057	3.095	0.002

Specific Indirect Effects

Mean, STDEV, T-Values, P-Val... | Confidence Intervals | Confidence Intervals Bias Co... | Samples

	Original Sampl...	Sample Mean (...	Standard Devia...	T Statistics (|O/...	P Values
TL -> CR -> WM	0.385	0.389	0.043	8.916	0.000

Based on the table above, the results of the hypothesis testing can be explained as follows:

1) The Effect of TL on CR
   The test results show that the beta coefficient value of Transformational Leadership (TL) on Commitment to Change (CR) is 0.586, with a t-statistic value of 13.901. These results indicate that the t-statistic is significant because it is greater than 1.96, and the significance value is 0.000 < 0.05; therefore, the hypothesis is accepted. This proves that TL has a significant effect on CR.
2) The Effect of CR on WM
   The test results show that the beta coefficient value of Commitment to Change (CR) on Worker Motivation (WM) is 0.657, with a t-statistic value of 13.589. These results indicate that the t-statistic is significant because it is greater than 1.96, and the significance value is 0.000 < 0.05; therefore, the hypothesis is accepted. This proves that CR has a significant effect on WM.
3) The Effect of TL on WM
   The test results show that the beta coefficient value of Transformational Leadership (TL) on Worker Motivation (WM) is 0.176, with a t-statistic value of 3.095. These results indicate that the t-statistic is significant because it is greater than 1.96, and the significance value is 0.002 < 0.05; therefore, the hypothesis is accepted. This proves that TL has a significant effect on WM.
4) The Effect of TL on WM through CR as a Mediating Variable
   The test results show that the beta coefficient value of Transformational Leadership (TL) on Worker Motivation (WM) through Commitment to Change (CR) is 0.385, with a t-statistic value of 8.916. These results indicate that the t-statistic is significant because it is greater than 1.96, and the significance value is 0.000 < 0.05; therefore, the hypothesis is accepted. This proves that TL has a significant effect on WM through CR as a mediating variable, meaning that CR is able to mediate the effect of TL on WM.

Discussion

A. The Effect of Transformational Leadership on Readiness to Change

The results of this study indicate that Transformational Leadership (TL) has a significant influence on Readiness to Change. This finding suggests that the higher the implementation level of transformational leadership style, the greater the individual's readiness to face and accept organizational change.

This condition illustrates that leaders who are able to inspire, provide a clear vision, and show individualized consideration toward their subordinates tend to create a work environment that is open to change. In the context of organizations such as hospitals or healthcare institutions, the role of transformational leaders becomes crucial, as they not only encourage innovation but also foster self-confidence and collective enthusiasm to adapt to organizational dynamics.

Transformational leaders are capable of developing their followers through four main dimensions: idealized influence, inspirational motivation, intellectual stimulation, and individualized consideration. Through this approach, leaders focus not only on achieving goals but also on building the mental and emotional readiness of individuals to undergo change in a positive and participatory manner.

Support for this finding is also found in the study by Ji et al9, which showed that leadership communication and clarity of vision are crucial determinants of an organization's readiness to undergo transformation. Similarly, research by Saif et al10 reinforced that a transformational leadership style significantly contributes to increasing employees' readiness for change. In addition, the study by Alqudah et al11 demonstrated that supervisor support

plays an important role in shaping positive perceptions of change, which ultimately enhances individual engagement and readiness.

However, these results are not entirely consistent with the findings of Anagnostakis et al12, who discovered that individual personality factors exert a stronger influence on readiness to change than leadership style. In this context, Oreg emphasized that resistance to change is largely influenced by internal individual factors, such as a tendency to seek stability and discomfort with uncertainty, which are not always modifiable through leadership style.

Based on the above discussion, it can be concluded that transformational leadership significantly contributes to increasing organizational readiness for change. This finding is supported by relevant theories and numerous empirical studies, although alternative perspectives highlight the importance of individual characteristics. Therefore, in promoting readiness to change, organizations should not only focus on strengthening leadership styles but also consider approaches that address psychological aspects and individual uniqueness.

B. The Effect of Readiness to Change on Worker Motivation

The results of the study indicate that readiness to change, or an individual's preparedness to face change, has a significant influence on worker motivation. This finding shows that when individuals or employees are mentally, emotionally, and behaviorally ready to face change, they tend to have higher work motivation in performing their duties and contributing to the organization.

This result reflects that employees who feel ready to face change whether in terms of understanding the direction of change, believing in its benefits, or receiving adequate support are more motivated to work. Such readiness provides individuals with a sense of security and clarity, allowing them to channel their energy and effort more positively. In the context of healthcare organizations, such as hospitals, employees who are prepared to face dynamic policies and new procedures tend to display high work enthusiasm, initiative, and engagement in their work processes.

Work motivation is influenced by individuals' perceptions of the extent to which their efforts will result in good performance and how such performance will lead to desired outcomes. When individuals feel ready for change, they tend to have a positive perception of their ability to succeed in managing that change, thereby increasing their internal motivation to contribute. Readiness to change thus represents an important psychological condition that supports the effective implementation of change and ultimately influences the level of individual work motivation.

This finding is supported by previous studies showing that readiness to change is positively correlated with work attitudes and employee motivation, particularly in organizations undergoing transformation. Similarly, Meria et al13, revealed that readiness to change is associated with increased participation and enthusiasm within organizations. A study by Doeze et al14 also showed that individuals who have positive perceptions of change tend to work more enthusiastically and proactively.

However, this finding contradicts the results of Abu et al15, who concluded that readiness to change does not always guarantee increased work motivation, especially if the change process does not involve active employee participation in decision-making. According to Lines, without a sense of ownership toward change, passive readiness or mere understanding is insufficient to drive high work motivation.

From these findings, it can be concluded that readiness to change is one of the key factors influencing employee work motivation. When individuals are ready and able to embrace change positively, they tend to exhibit stronger work motivation. Nevertheless, it is important for organizations to ensure that the change process is carried out participatively and

communicatively, so that readiness is truly internalized and has a tangible impact on increasing work motivation.

C. The Effect of Transformational Leadership on Worker Motivation

The results of this study show that transformational leadership has a significant influence on worker motivation. Although the magnitude of this influence is not as strong as the relationship between readiness to change and work motivation, the findings still indicate that the higher the quality of transformational leadership implemented, the higher the level of work motivation perceived by employees.

Based on field analysis, the relationship between these two variables occurs because leaders who provide clear direction, intellectual challenges, and show concern for individual needs and development indirectly create a work environment that fosters internal motivation. In the context of healthcare institutions, this leadership style is reflected in managers or unit heads who are not only target-oriented but also build emotional relationships with their staff, provide constructive feedback, and encourage them to grow professionally.

Transformational leaders play an important role in enhancing employee motivation by forming an inspiring vision, stimulating creative thinking, and demonstrating personal attention. Through this approach, leaders do not merely act as directors but also serve as sources of energy and motivation that drive employees to deliver their best performance.

This finding is supported by the study of Nhat et al16, which stated that transformational leadership is positively correlated with work motivation and job satisfaction across various sectors, including public service organizations. Furthermore, research by Adi et al 17 found that the dimensions of transformational leadership, particularly inspirational motivation and individualized consideration, play a crucial role in enhancing employees' intrinsic motivation. Another study by Romi et al18 conducted in healthcare organizations in developing countries revealed that employees led by transformational leaders tend to have higher enthusiasm, greater proactivity, and stronger loyalty toward the organization.

However, these results differ from the findings of Khoerunnisa et al19, who discovered that the influence of transformational leadership on work motivation becomes insignificant when the work environment does not provide autonomy or space for employee self-actualization. In situations where the organizational structure is overly hierarchical or the work culture is too bureaucratic, transformational leadership becomes less effective in enhancing motivation due to systemic barriers that limit individual freedom.

Based on the above discussion, it can be concluded that transformational leadership plays an essential role in fostering employee work motivation, although its influence is not as strong as other factors such as readiness to change. The effectiveness of this leadership style also depends heavily on the organizational context and a supportive work culture. Therefore, leaders must not only build strong relationships with their subordinates but also create a work system that allows for growth and active participation to maximize employees' motivational potential.

D. The Effect of Transformational Leadership (TL) on Worker Motivation (WM) through Commitment to Change (CR) as a Mediating Variable

The results of the study indicate that Transformational Leadership (TL) has a significant influence on Worker Motivation (WM) through Commitment to Change (CR) as a mediating variable. This finding demonstrates that the presence of CR mediates the relationship between transformational leadership and work motivation. In other words, the effect of TL on WM does not occur solely through a direct relationship but is also strengthened through an increase in individuals' commitment to change.

In practice, this phenomenon illustrates that transformational leaders do not merely inspire or motivate directly, but more importantly, they cultivate employees' commitment to

change, which in turn enhances their work motivation. For example, when a leader promotes positive values of change, involves employees in the change process, and strengthens their sense of ownership toward organizational goals, a psychological commitment develops among employees to support and implement the change. This commitment ultimately becomes an intrinsic source of energy that drives work motivation.

The effect of leadership on employee outcomes is often mediated by psychological factors, one of which is commitment. Moreover, the concept of affective commitment to change, as developed by Kalogiannidis20 suggests that when employees feel emotionally attached to change, they tend to exhibit higher levels of work motivation. Transformational leadership is highly effective in fostering such commitment because it builds strong relationships and a sense of responsibility toward the organization's vision.

This finding is consistent with the research conducted by Boamah et al21, which found that transformational leadership enhances commitment to change, subsequently leading to increased work motivation. Similarly,Qalati et al 22, stated that emotional engagement and commitment to change mediate the relationship between leadership and work outcomes, including motivation and performance. Furthermore, the study by Mutmainnah et al23 also supports that commitment to change serves as a crucial pathway explaining how leadership influences positive work behaviors.

Conversely, the study by Hinterdorfer et al24 showed that in some organizational contexts undergoing major and complex transformations, commitment to change does not always successfully mediate the relationship between leadership and work motivation. Factors such as organizational uncertainty, lack of communication, or employee resistance may hinder the formation of commitment. As a result, even when leadership is transformational, its impact on work motivation may not be optimal if commitment to change is not firmly established.

From the various findings above, it can be concluded that commitment to change plays a pivotal role in strengthening the influence of transformational leadership on worker motivation. Effective transformational leaders not only provide direction and direct motivation but also cultivate emotional commitment to change, which ultimately becomes a driving force for sustained work motivation. Therefore, organizations should promote a leadership style that is not only charismatic but also capable of building trust, engagement, and a sense of responsibility toward change within the workplace.

CONCLUSION

This study found that transformational leadership was positively and significantly associated with commitment to change and work motivation among healthcare workers. Commitment to change was also positively associated with work motivation and significantly mediated the relationship between transformational leadership and work motivation, while the direct relationship remained significant. These findings indicate complementary partial mediation, suggesting that transformational leadership supports healthcare workers' motivation both directly and through the development of their commitment to organizational change. The study therefore contributes to leadership and organizational behavior research by demonstrating the psychological role of commitment to change within the context of Indonesian hospitals.

Hospital administrators should translate these findings into structured leadership-development programs for managers and unit heads, focusing on communicating a clear vision, explaining the purpose and benefits of organizational change, providing individualized support, and encouraging employees to propose new ideas. Hospitals should also involve healthcare workers in planning and implementing change, establish regular feedback forums, appoint change champions within each unit, and periodically monitor employees' commitment to

change and work motivation. These measures may help hospital management maintain employee engagement and motivation throughout organizational change.

These findings should be interpreted in light of several limitations. The cross-sectional design does not establish the temporal sequence or causal relationships among the variables. In addition, the purposive sample of 259 healthcare workers from three hospitals in Central Java limits the generalizability of the findings to other hospitals, geographical areas, and healthcare professional groups. The use of self-reported questionnaires may also have introduced response bias and common method bias. Future studies should employ longitudinal or experimental designs, involve hospitals from different regions, use probability sampling, and incorporate data from multiple sources to provide stronger evidence regarding the proposed relationships.

REFERENCES

Khan IU, Amin RU, Saif N. Individualized Consideration and Idealized influence of transformational Leadership: Mediating Role of Inspirational Motivation and Intellectual stimulation. International Journal of Leadership in Education. Published online 2022. doi:10.1080/13603124.2022.2076286

Zhang P. Target Interactions and Target Aspiration Level Adaptation: How Do Government Leaders Tackle the "Environment-Economy" Nexus? Public Adm Rev. 2021;81(2):220-230. doi:10.1111/puar.13184

Mohammed IS, Wuni A, Nyarko BA, Ibrahim MM, Chanayireh L. Work engagement: the key driver in transforming organizational commitment into enhanced work performance among midwives in Ghana - a structural equation modelling approach. BMC Health Serv Res. 2025;25(1). doi:10.1186/s12913-025-13062-4

Morris LS, Grehl MM, Rutter SB, Mehta M, Westwater ML. On what motivates us: A detailed review of intrinsic v. extrinsic motivation. Psychol Med.Cambridge University Press. 2022;52(10):1801-1816. doi:10.1017/S0033291722001611

Tripuspita M, Sudiro A, Sumiati, Irawanto DW. Change Leadership Ability to Improve Employees' Readiness to Change. International Journal of Professional Business Review. 2023;8(6):e01971. doi:10.26668/businessreview/2023.v8i6.1971

Islam MN, Furuoka F, Idris A. Transformational leadership and employee championing behavior during organizational change: the mediating effect of work engagement. South Asian Journal of Business Studies. 2022;11(1):1-19. doi:10.1108/SAJBS-01-2020-0016

Divya S, Christopher B P. The Role of Supervisor Support and Change Information in Determining Behavioral Attitudes Toward Change in an Academic Setting: Empirical Validation of Intra-Organizational Dynamics Using IPMA Analysis. Sage Open. 2025;15(3). doi:10.1177/21582440251367804

Creswell JW. Research Qualitative, Quantitative, Adn Mixed Methods Approaches Design. 4 Edition. (Knight V, Young J, Koscielak K, eds.). SAGE Publication, Inc; 2014.

Ji D, Gong J, Guo Z. Vision Communication and Firm Quality Performance: The Mediating Role of Employee Involvement and the Moderating Effect of Leader Support. Behavioral Sciences. 2024;14(10). doi:10.3390/bs14100902

Saif N, Amelia, Goh GGG, Rubin A, Shaheen I, Murtaza M. Influence of transformational leadership on innovative work behavior and task performance of individuals: The mediating role of knowledge sharing. Heliyon. 2024;10(11). doi:10.1016/j.heliyon.2024.e32280

Alqudah IHA, Carballo-Penela A, Ruzo-Sanmartín E. High-performance human resource management practices and readiness for change: An integrative model including affective commitment, employees' performance, and the moderating role of hierarchy

culture. European Research on Management and Business Economics. 2022;28(1). doi:10.1016/j.iedeen.2021.100177

Anagnostakis A. Fostering Conscious Leadership: Exploring Leaders' Experience of Vertical Development during an Executive Leadership Program. doi:10.25907/00707

Meria L, Saukani, Prastyani D, Dudhat A. The Role of Transformational Leadership and Self-Efficacy on Readiness to Change Through Work Engagement. APTISI Transactions on Technopreneurship. 2022;4(1):78-89. doi:10.34306/att.v4i1.242

Doeze Jager SB, Born MP, van der Molen HT. The relationship between organizational trust, resistance to change and adaptive and proactive employees' agility in an unplanned and planned change context. Applied Psychology. 2022;71(2):436-460. doi:10.1111/apps.12327

Abu Bakar R. Understanding Factors Influencing Employee Engagement: A Study of the Financial Sector in Malaysia School of Management Business Portfolio RMIT University.; 2023.

Nhat Vuong B, Nam Khanh Giao H, Van Hung D. How transformational leadership influences employees' job-related outcomes through public service motivation: Does power distance orientation matter? Cogent Business and Management. 2023;10(1). doi:10.1080/23311975.2023.2176281

Adi Prasetya Wardana, Anisah HU. The Influence of Transformational Leadership on Employee Performance Through Intrinsic Motivation and Organizational Citizenship Behavior as Intervening Variables: Study at the High Religious Court of Jakarta Indonesia. Open Access Indonesia Journal of Social Sciences. 2023;6(5):1129-1141. doi:10.37275/oaijss.v6i5.182

Romi MV, Alsubki N, Almadhi HM, Propheto A. The Linkage Between Leadership Styles, Employee Loyalty, and Turnover Intention in Healthcare Industry. Front Psychol. 2022;13. doi:10.3389/fpsyg.2022.890366

Khoerunnisa SR, Widhiandono H, Suyoto S, Haryanto T. The Influence of Work Environment, Work Motivation, Transformational Leadership and Work-Life Balance on Employee Commitment at PT. Cogindo Daya Bersama Center. Asian Journal of Applied Business and Management. 2025;4(3):931-948. doi:10.55927/ajabm.v4i3.388

Kalogiannidis S. IMPACT OF EMPLOYEE MOTIVATION ON ORGANIZATIONAL PERFORMANCE. A SCOPING REVIEW PAPER FOR PUBLIC SECTOR.; 2021. www.strategicjournals.com

Boamah SA. The impact of transformational leadership on nurse faculty satisfaction and burnout during the COVID-19 pandemic: A moderated mediated analysis. J Adv Nurs. 2022;78(9):2815-2826. doi:10.1111/jan.15198

Qalati SA, Zafar Z, Fan M, Sánchez Limón ML, Khaskheli MB. Employee performance under transformational leadership and organizational citizenship behavior: A mediated model. Heliyon. 2022;8(11). doi:10.1016/j.heliyon.2022.e11374

Mutmainnah D, Yuniarsih T, Sojanah J, Rahayu M, Nusannas IS. THE IMPACT OF DIRECTIVE LEADERSHIP ON INNOVATIVE WORK BEHAVIOR: THE MEDIATION ROLE OF CONTINUANCE COMMITMENT. Journal of Indonesian Economy and Business. 2022;37(3):268-286. https://journal.ugm.ac.id/v3/jieb

Hinterdorfer Bsc T, Biscaro UC. 2025 EXPLORING THE RELATIONSHIP BETWEEN ORGANIZATIONAL STRUCTURE AND CREATIVITY ON THE EXAMPLE OF A HIERACHICAL ORGANIZATIONAL FRAMEWORK.